PRESSURE SWITCHES WITH GAUGE PS60

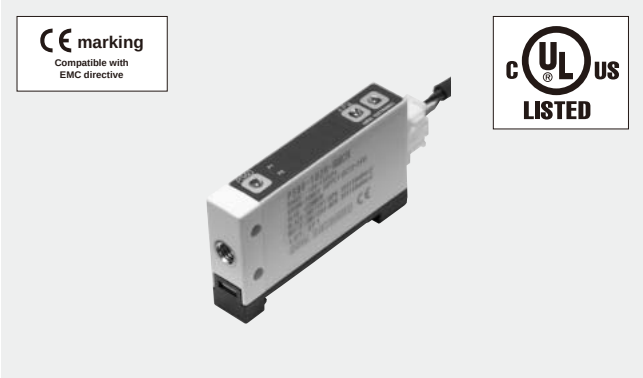

INTERNAL STRUCTURE

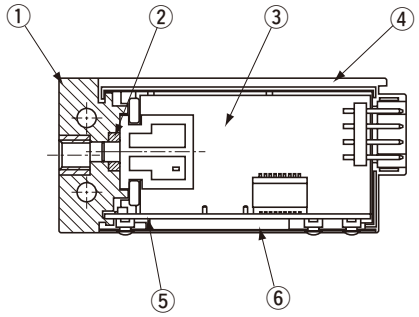

	Part name	Material
1	Pressure port	Polyamide (Resin of MXD6 series) Brass (Ni-plated)
2	"O" ring	Fluoro-rubber
3	Sensor module board	———
4	Housing	PBT (Polybutyleneterephtalate)
5	Display board	———
6	Operation panel seet	Polyester

FEATURES

- Applicable for negative through positive pressure with 10 mm thick slim housing
- Suitable for use in clean rooms with easy-to-use push keys
- Plug-in connector is provided for easy installation and maintenance
- Space saving and mountable on DIN rails
- Data protection by panel lock system
- Low consumption by nondisplay mode

MODEL NUMBER DESIGNATION

P S 6 0 - 1 0 2 R - N M C N

Series name

Rated pressure range
102 : –100 ~ 100 kPa 103 : –100 ~ 1000 kPa
302 : –100 ~ 300 kPa

Pressure reference
R : Compound pressure (Negative pressure ~ Positive pressure)

Signal / power cable pullout method
CN : Connector pullout

Pressure port
M : M5 female screw

Switch output interface
N : NPN open collector
P : PNP open collector

LIST OF MODEL NUMBERS

Pressure port	Switch output	102R	302R	103R
		–100 ~ 100 kPa	–100 ~ 300 kPa	–100 ~ 1000 kPa
M 5 female screw	NPN open collector output	PS60-102R-NMCN	PS60-302R-NMCN	PS60-103R-NMCN
	PNP open collector output	PS60-102R-PMCN	PS60-302R-PMCN	PS60-103R-PMCN

※Verify the above model numbers when placing orders.

■ Specifications are subject to change without notice. Specifications in this catalog are for reference. The formal specification sheets will be submitted upon request.

Dec, 2007

PS60
PRESSURE SWITCHES WITH GAUGE

STANDARD SPECIFICATIONS

● Unless otherwise specified, the specs are defined at an ambient temperature of 25 ± 5 °C and excitation voltage of 24 V DC.

Item	Model number	PS60		
		102R	302R	103R
General specifications	Pressure reference	Gauge		
	Rated pressure range kPa	–100 ~ 100	–100 ~ 300	–100 ~ 1000
	Maximum pressure kPa	200	600	1500
	Break-down pressure kPa	500	1000	2000
	Operating temp. range °C	–10 ~ 50		
	Compensated temp. range °C	0 ~ 50		
	Operating humidity %RH	35 ~ 85 (No condensation)		
	Storage temp. °C	–20 ~ 70 (Atmospheric pressure, humidity 65 %RH maximum)		
	Pressure medium	Non-corrosive gases		
	Insulation resistance MΩ min.	100 (500 V DC)		
	Thermal error	± 3 %F.S. (0 ~ 50 °C)		
	Dielectric strength	500 V AC, 60 s (Leakage current 1 mA maximum)		
	Pressure port	M5 Female screw		
	Net weight g	Approx. 50 (Includihg cable)		
Power	Supply voltage V DC	12 ~ 24 V ± 10 % (Including ripple percentage)		
	Consumption current mA max.	30		
Display	Display element	3-digit LED		
	Rated display range	–100 ~ 100 kPa	–100 ~ 300 kPa	–0.10 ~ 1.00 MPa
	Display accuracy 0～50℃ (Reference temp. 25 °C)	± 1 %F.S.		
	Resolution	1 count		
Switch output	No. of outputs	2		
	Output interface	Open collector output (NPN or PNP)		
	Setting method	Adjustable by panel switch		
	Adjustable range	–110 kPa (approx.) ~ "999" counts		
	Display	Red LED ON		
	Repeatability	± 0.3 %F.S. maximum		
	Switch hysteresis	0 ~ 30 counts		
	Switching capacity	30 V 100 mA maximum		
	Residual voltage V maximum	1.2 (NPN), 2.2 (PNP)		
	Response ms	Approx. 5, 25, 250		
Accessories		PS60 cable, DIN rail adaptor		

■ Specifications are subject to change without notice. Specifications in this catalog are for reference. The formal specification sheets will be submitted upon request.

PS60
PRESSURE SWITCHES WITH GAUGE

■ENVIRONMENTAL CHARACTERISTICS

Test item	Test conditions	Permissible change
Vibration	10 ~ 500 Hz, 1.5 mm maximum/98.1 m/s², 3 directions for 2 hours each	Pressure indication and switch operating point : ± 2 %F.S., maximum each after test
Shock	490 m/s², 3 directions for 3 times each	
Moisture resistance	40 °C, 90 ~ 95 %RH, 240 hrs.	
Pressure cycling	0 ~ Rated pressure, 10^6 cycles	
EMC	EMI : EN55011 (Group 1, Class B) : 1998 EMS : EN61326-1 : 1997 / A1 : 1998, EN61000-6-2 : 1999	Pressure indication and switch operating point : ± 5 %F.S., maximum during test

■CIRCUIT DIAGRAMS

● NPN open collector

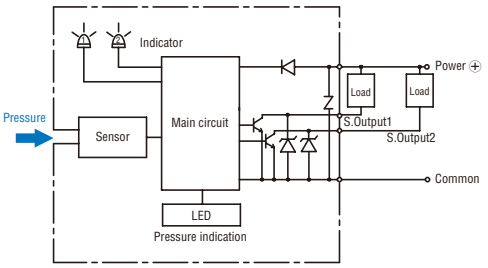

● PNP open collector

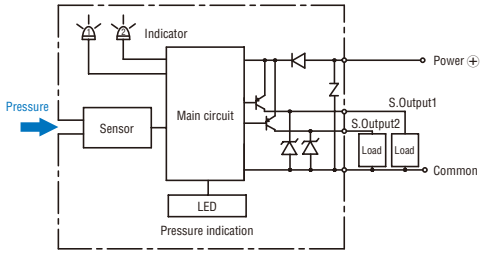

■SWITCH OUTPUT MODE

Output	SW1				SW2			
Mode	Separate		Window comparator		Separate		Window comparator	
Operation	HI	LO	A	B	HI	LO	A	B
1	○				○			
2	○					○		
3		○			○			
4		○				○		
5			○				○	
6			○					○
7				○			○	
8				○				○
Pressure setting (Operating point)	Setting 1		(Lower limit) : Setting 1 (Upper limit) : Setting 2		Setting 2		(Lower limit) : Setting 1 (Upper limit) : Setting 2	

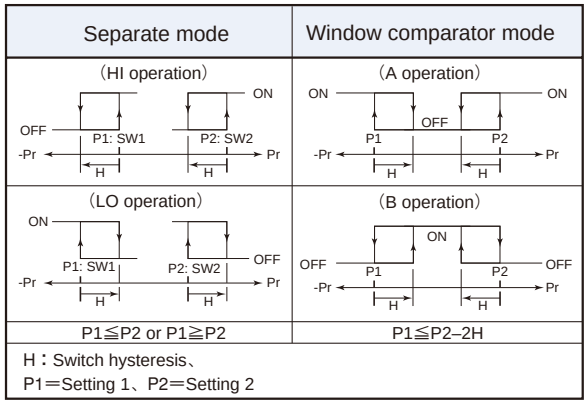

Note 1. In the Separate Mode, setting 1 corresponds to SW1, and Setting 2 corresponds to SW2.
Note 2. In the Window Comparator Mode, the minimum value for SW1 and SW2 corresponds to Setting 1 and the maximum value corresponds to Setting 2.

■DISPLAY RANGE

● Display range can be selected as the table.
Note) "–" on the table indicates that it is not selectable in relation to resolution and display lines.
❋ : In terms of setting display range, please verify the default mode.

Number	Rated pressure range		
	102R	302R	103R
1 (kPa)	–100 ~ 100	–100 ~ 300	—
2 (MPa)	—	—	–0.10 ~ 1.00
3	–75 ~ 75	–75 ~ 225	—
4	–1.00 ~ 1.00	–1.00 ~ 3.00	–1.0 ~ 10.0
5	–14.5 ~ 14.5	–14.5 ~ 43.5	–14 ~ 145
6	29.5 ~ 0.0❋	29.5 ~ 0.0❋	—

❋Atmospheric pressure

■ Specifications are subject to change without notice. Specifications in this catalog are for reference. The formal specification sheets will be submitted upon request.

PS60
PRESSURE SWITCHES WITH GAUGE

■OUTLINE DIMENTIONS

Unless otherwise specified, tolerance : ± 0.5 (Unit: mm)

● Pressure port M type (NMCN, PMCN)

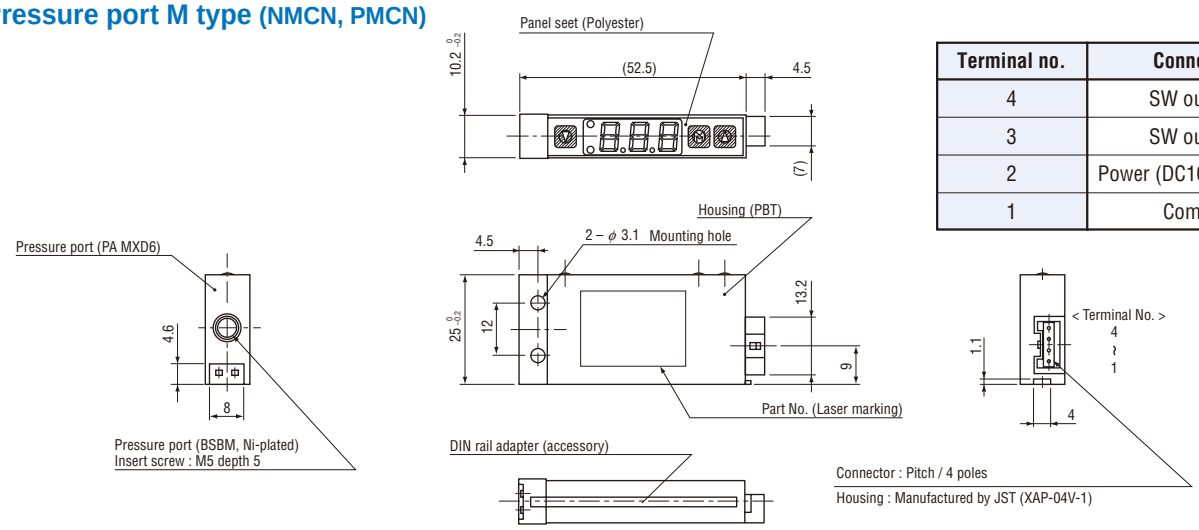

Terminal no.	Connection
4	SW output 1
3	SW output 2
2	Power (DC10.8 ~ 26.4 V)
1	Common

■Accessories

● Connector cable

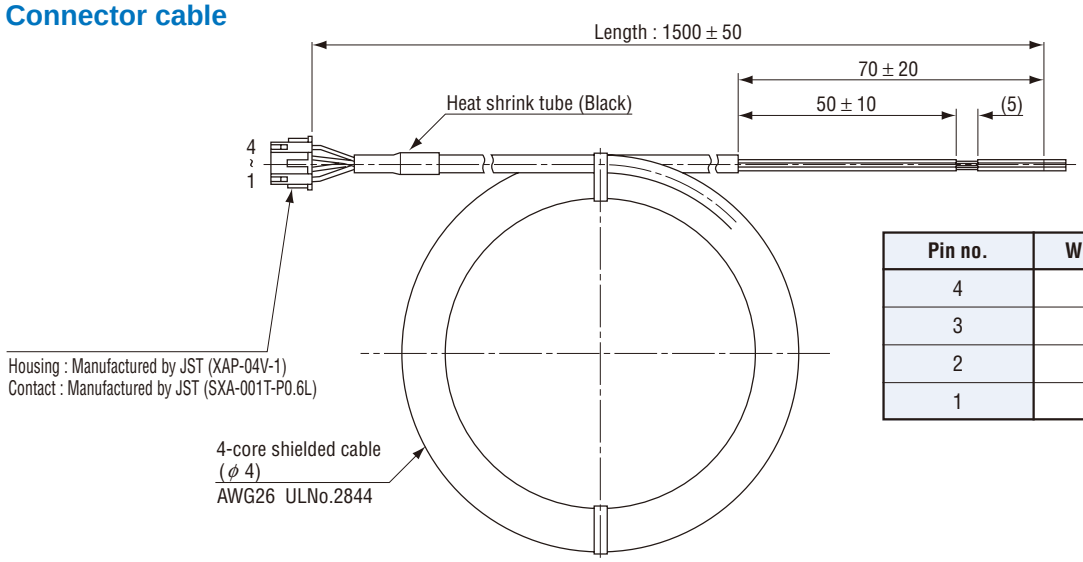

Pin no.	Wire color	Connection
4	Black	SW output 1
3	White	SW output 2
2	Blown	Power ⊕
1	Blue	Common

● DIN rail adapter

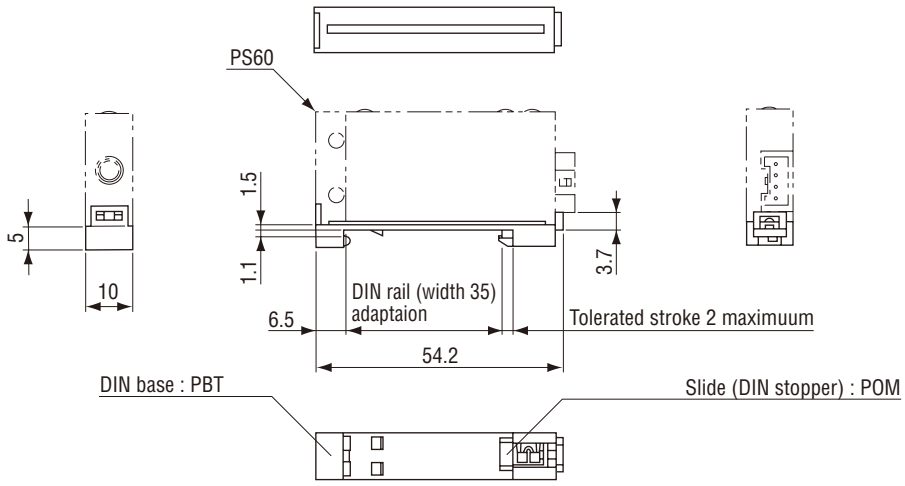

■ Specifications are subject to change without notice. Specifications in this catalog are for reference. The formal specification sheets will be submitted upon request.